WWW.TINYOFFICE.DK

TINY OFFICE FORMWORK

TEKNISKE TEGNINGER

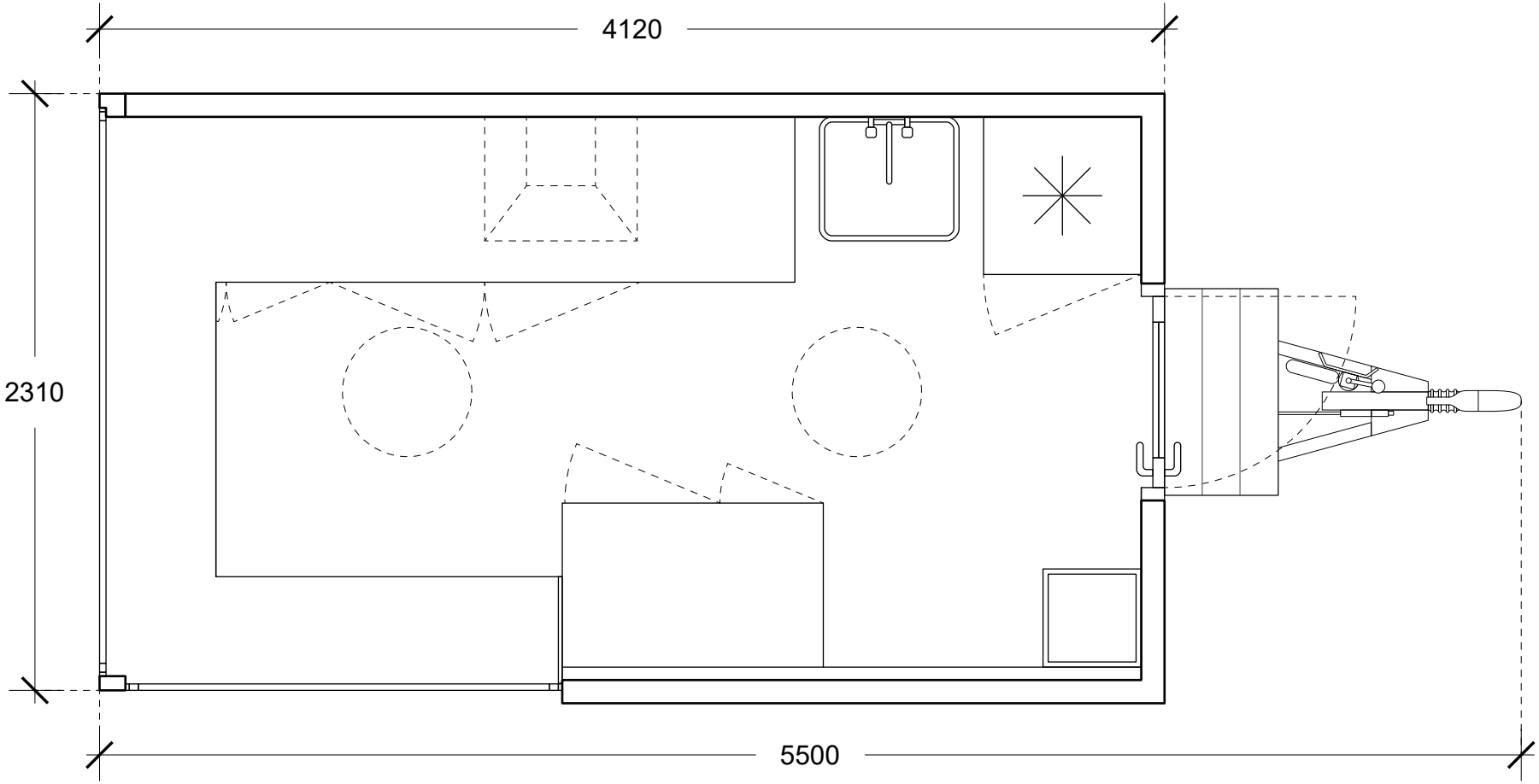

WWW.TINYOFFICE.DK

TINY OFFICE

TINY OFFICE FORMWORK

PLANTEGNING

SKALA 1:25

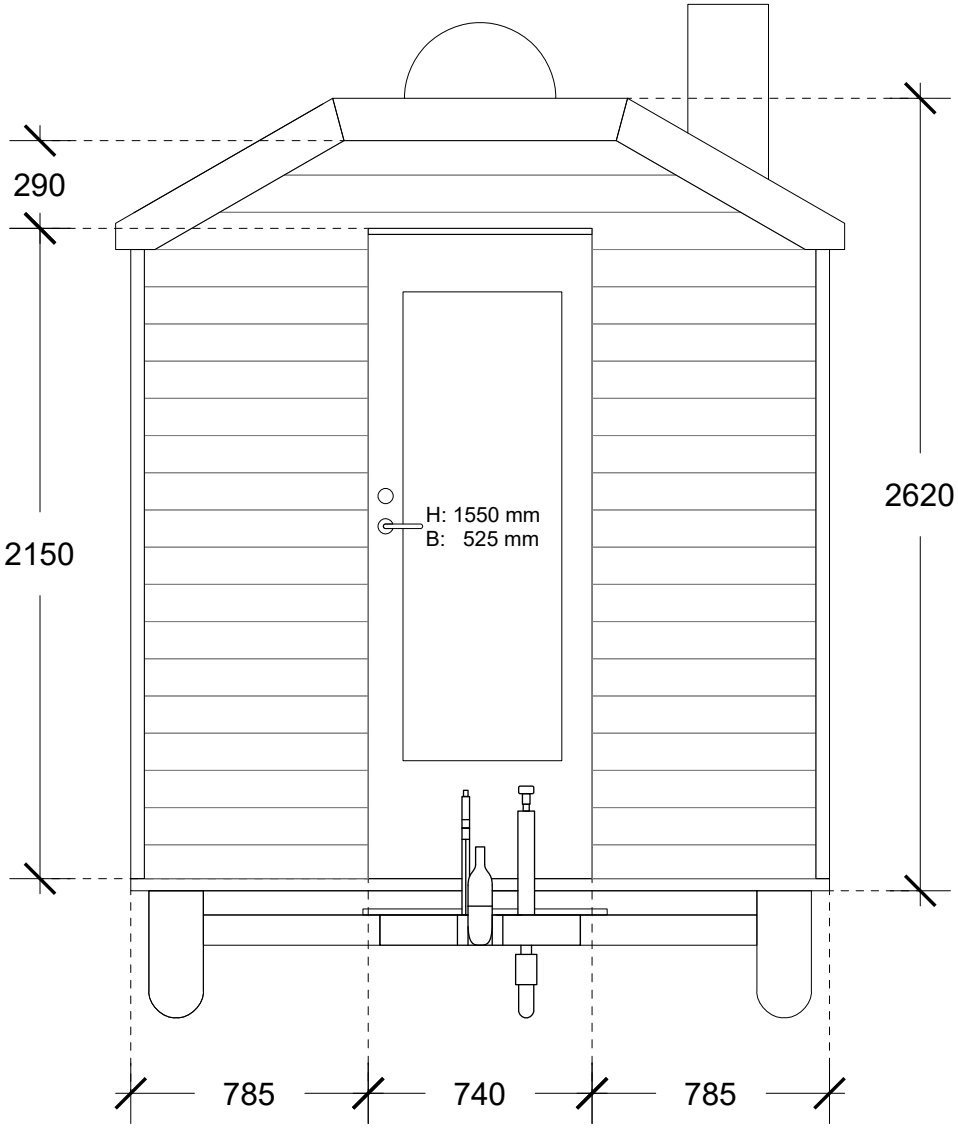

WWW.TINYOFFICE.DK

TINY OFFICE

TINY OFFICE FORMWORK

FRONT

SKALA 1:25

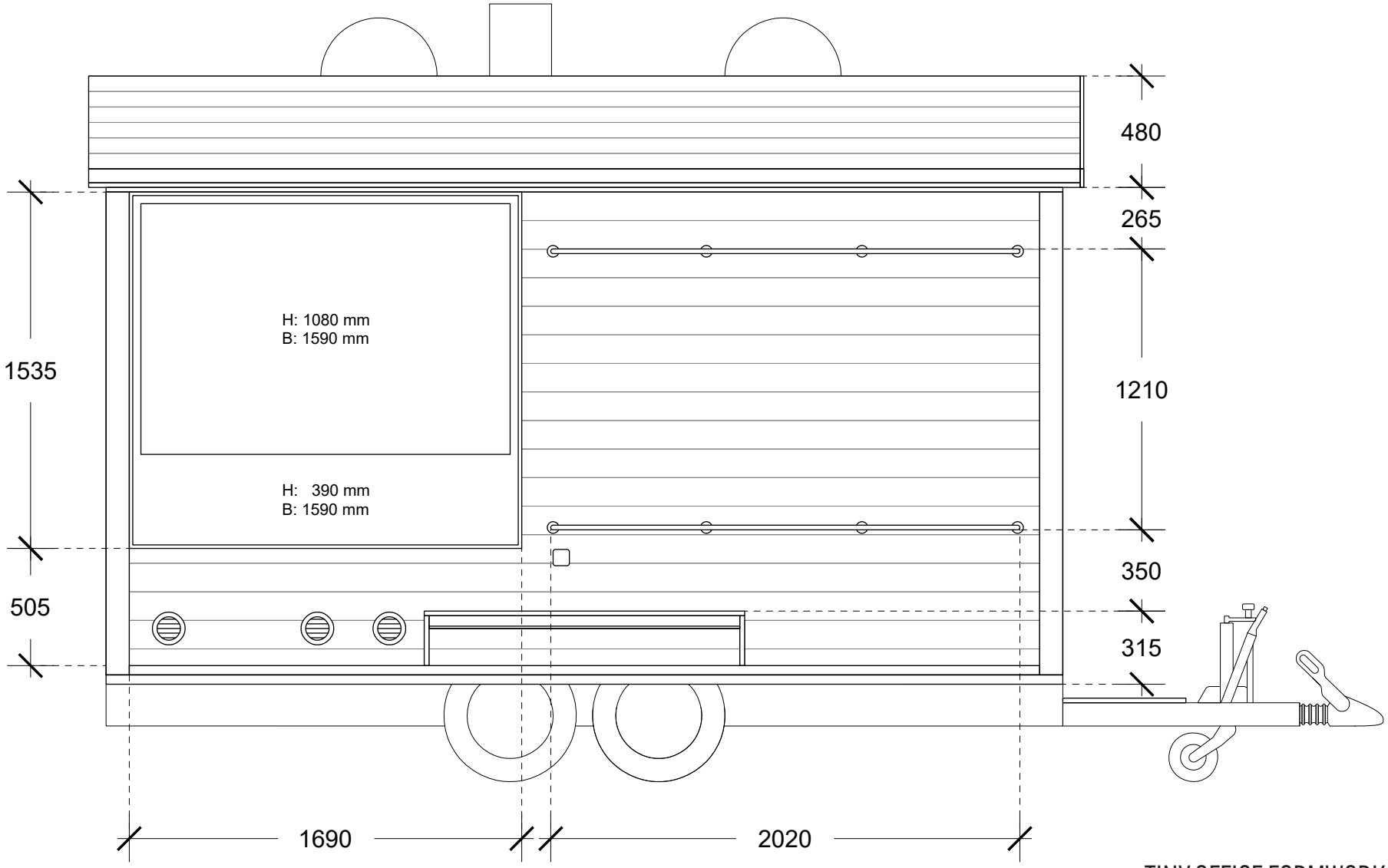

WWW.TINYOFFICE.DK

TINY OFFICE

TINY OFFICE FORMWORK

HØJRE SIDE

SKALA 1:25

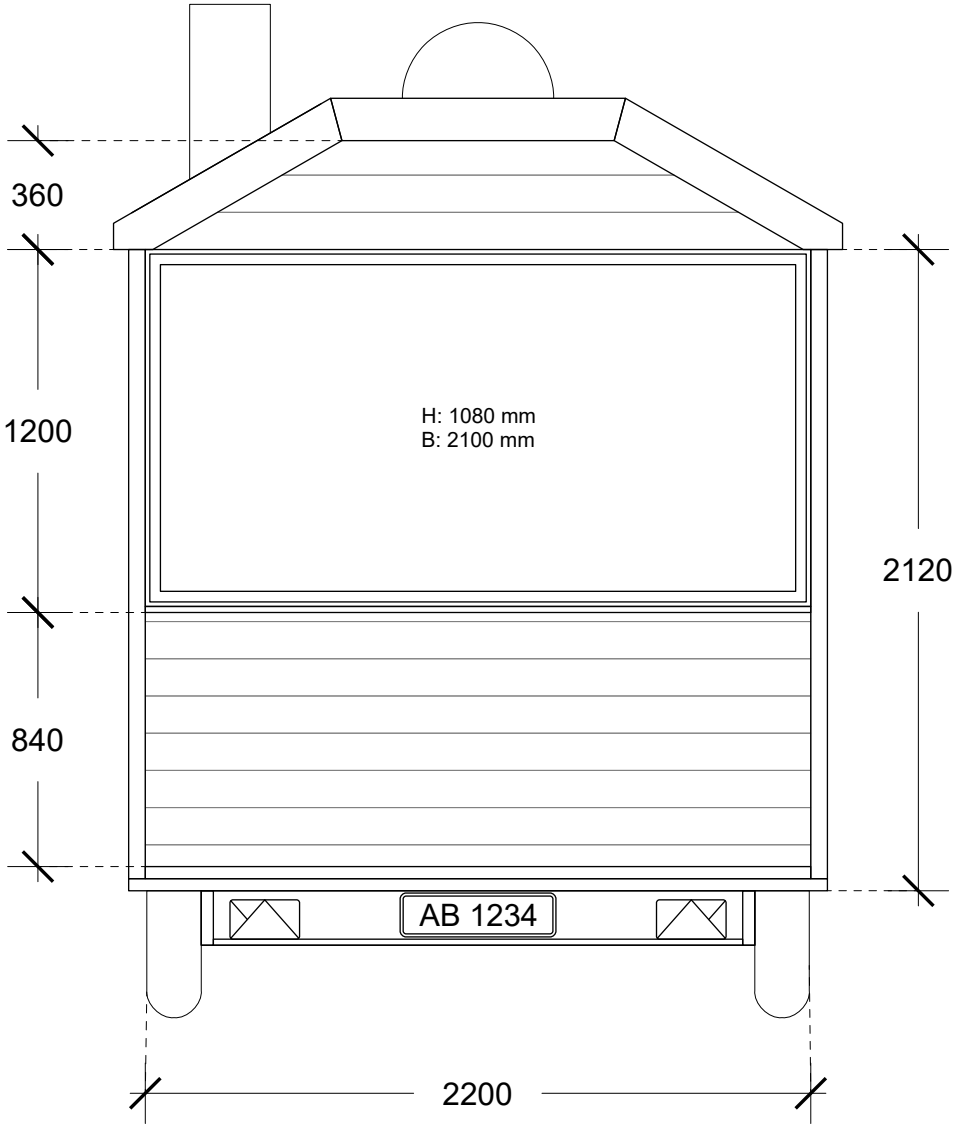

WWW.TINYOFFICE.DK

TINY OFFICE

TINY OFFICE FORMWORK

BAGSIDE

SKALA 1:25

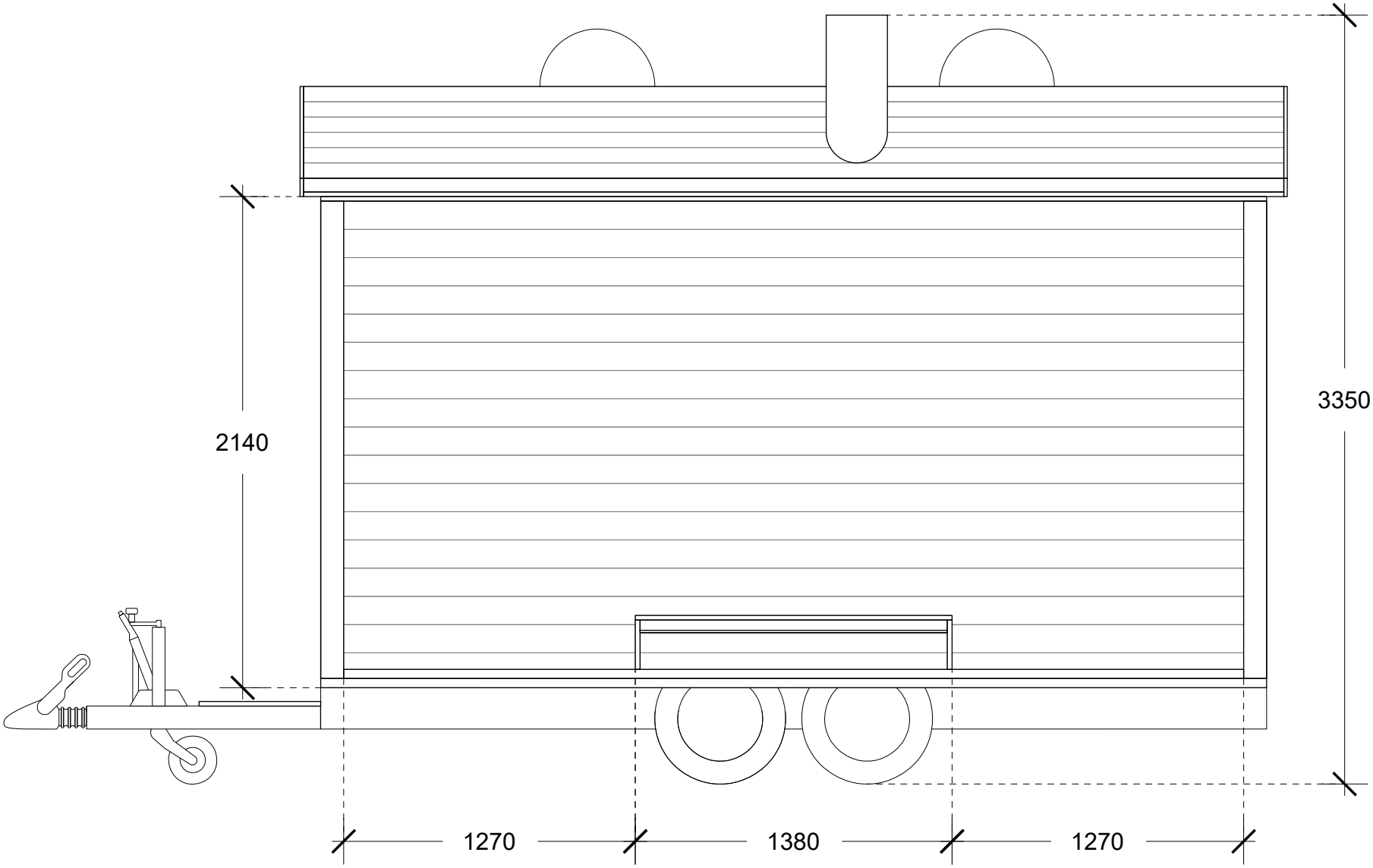

WWW.TINYOFFICE.DK

TINY OFFICE

TINY OFFICE FORMWORK

VENSTRE SIDE

SKALA 1:25