WWW.TINYOFFICE.DK

Tiny Office To Go

TEKNISKE TEGNINGER

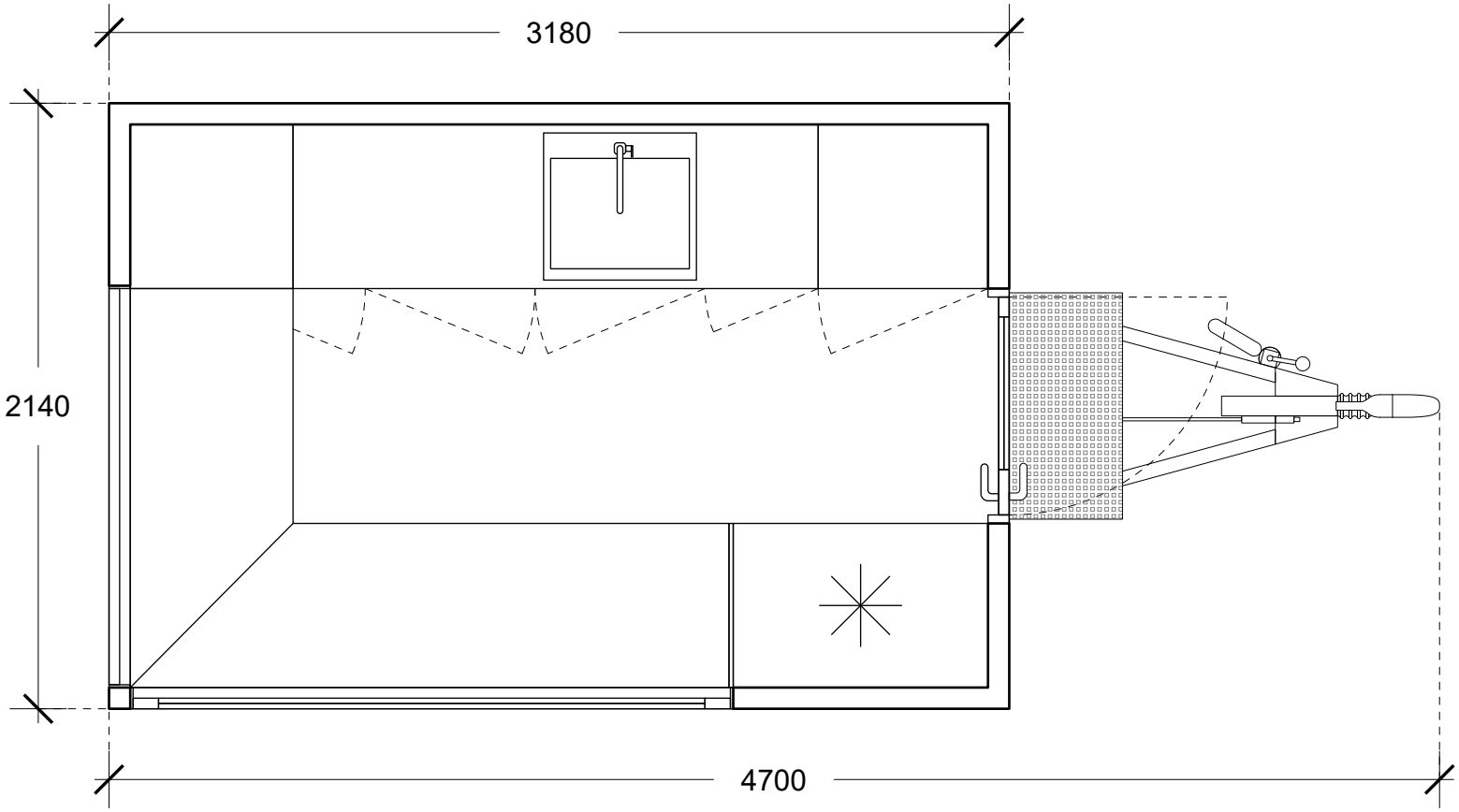

WWW.TINYOFFICE.DK

TINY OFFICE

TINY OFFICE TO GO

PLANTEGNING

SKALA 1:25

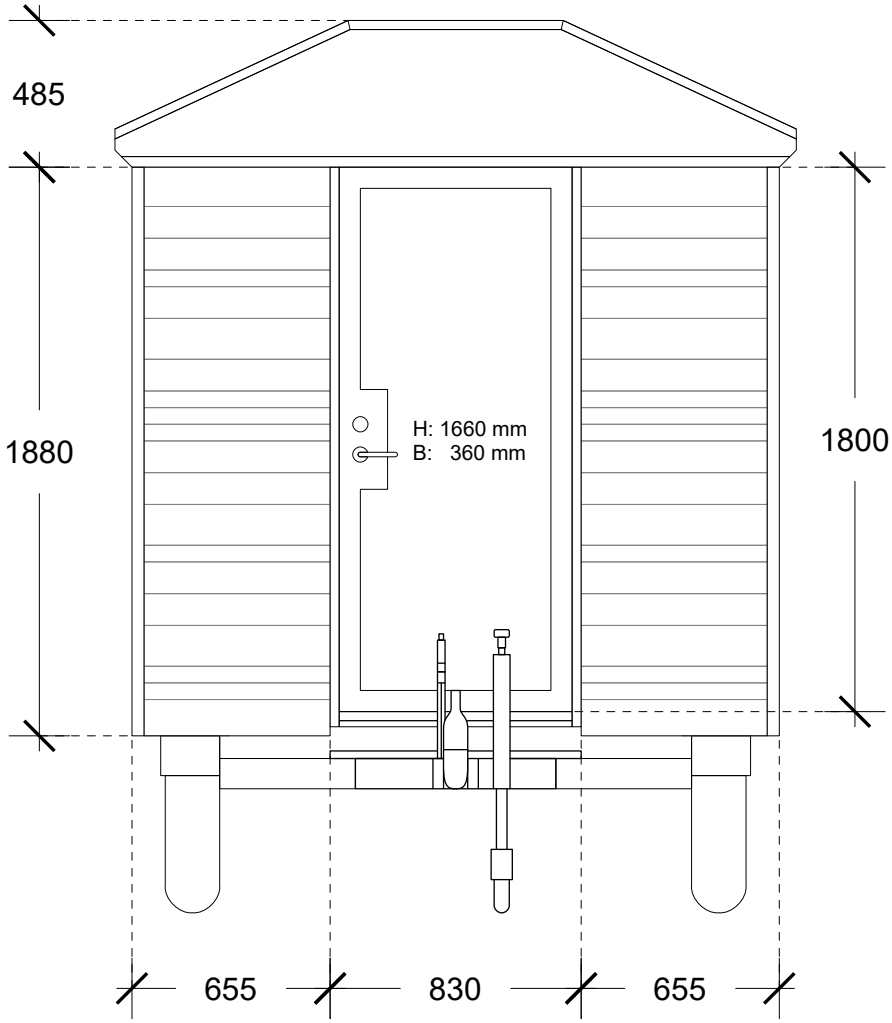

WWW.TINYOFFICE.DK

TINY OFFICE

TINY OFFICE TO GO

FRONT

SKALA 1:25

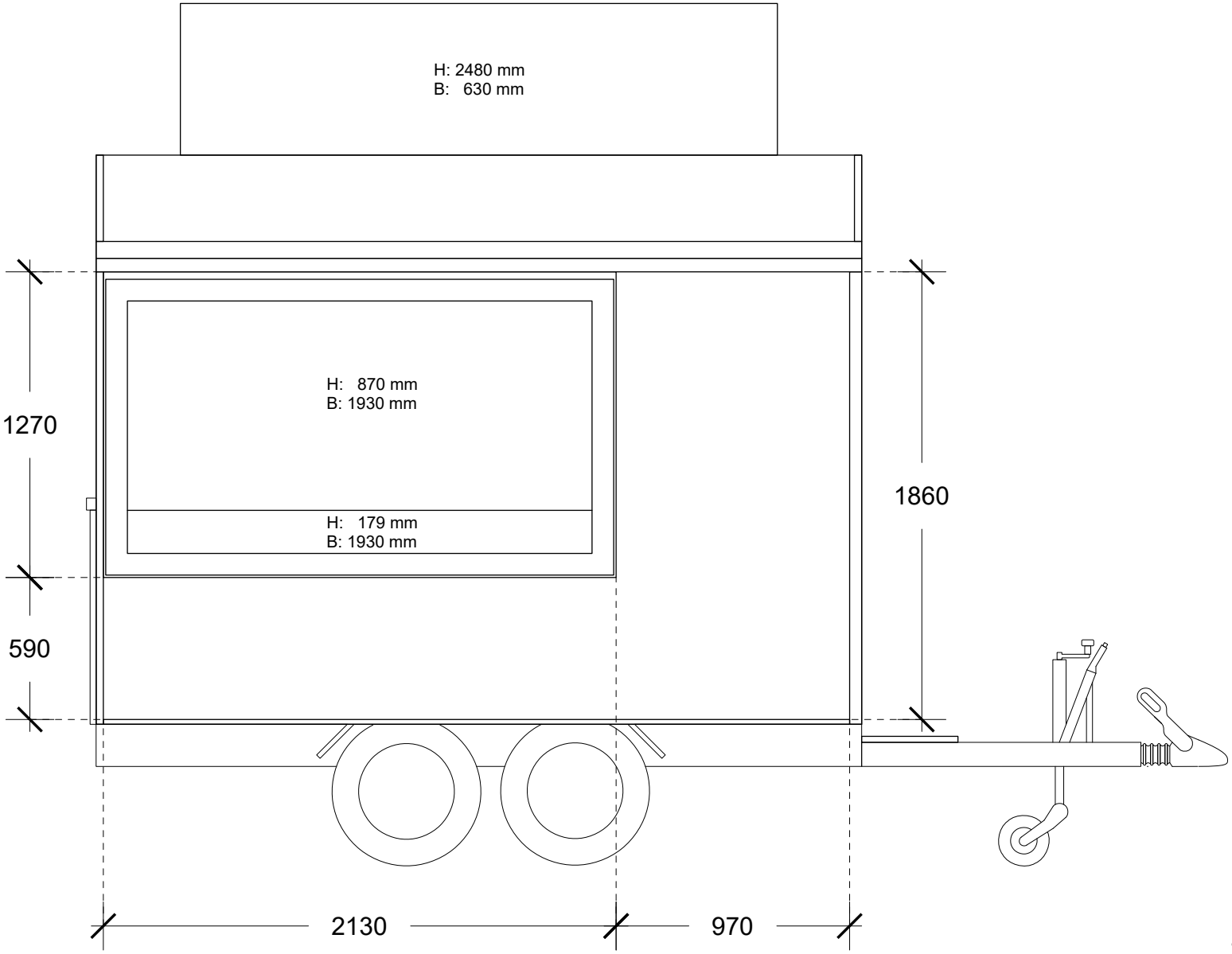

WWW.TINYOFFICE.DK

TINY OFFICE

TINY OFFICE TO GO

HØJRE SIDE

SKALA 1:25

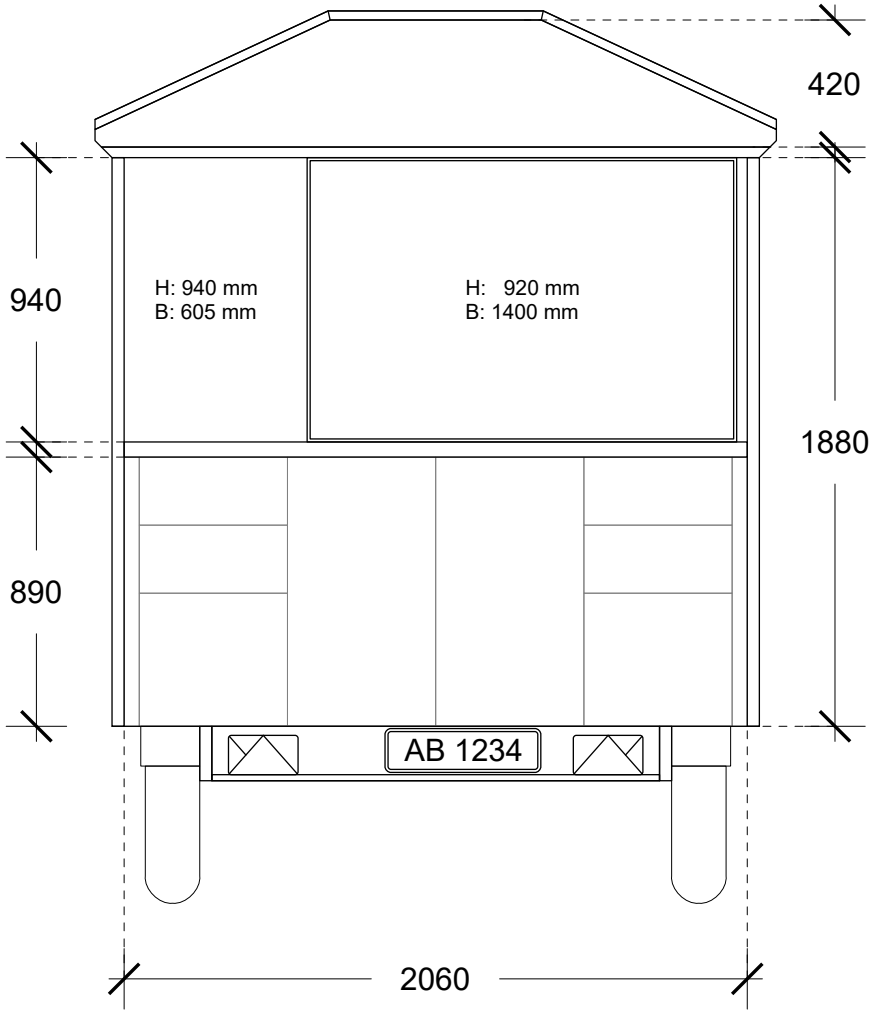

WWW.TINYOFFICE.DK

TINY OFFICE

TINY OFFICE TO GO

BAGSIDE

SKALA 1:25

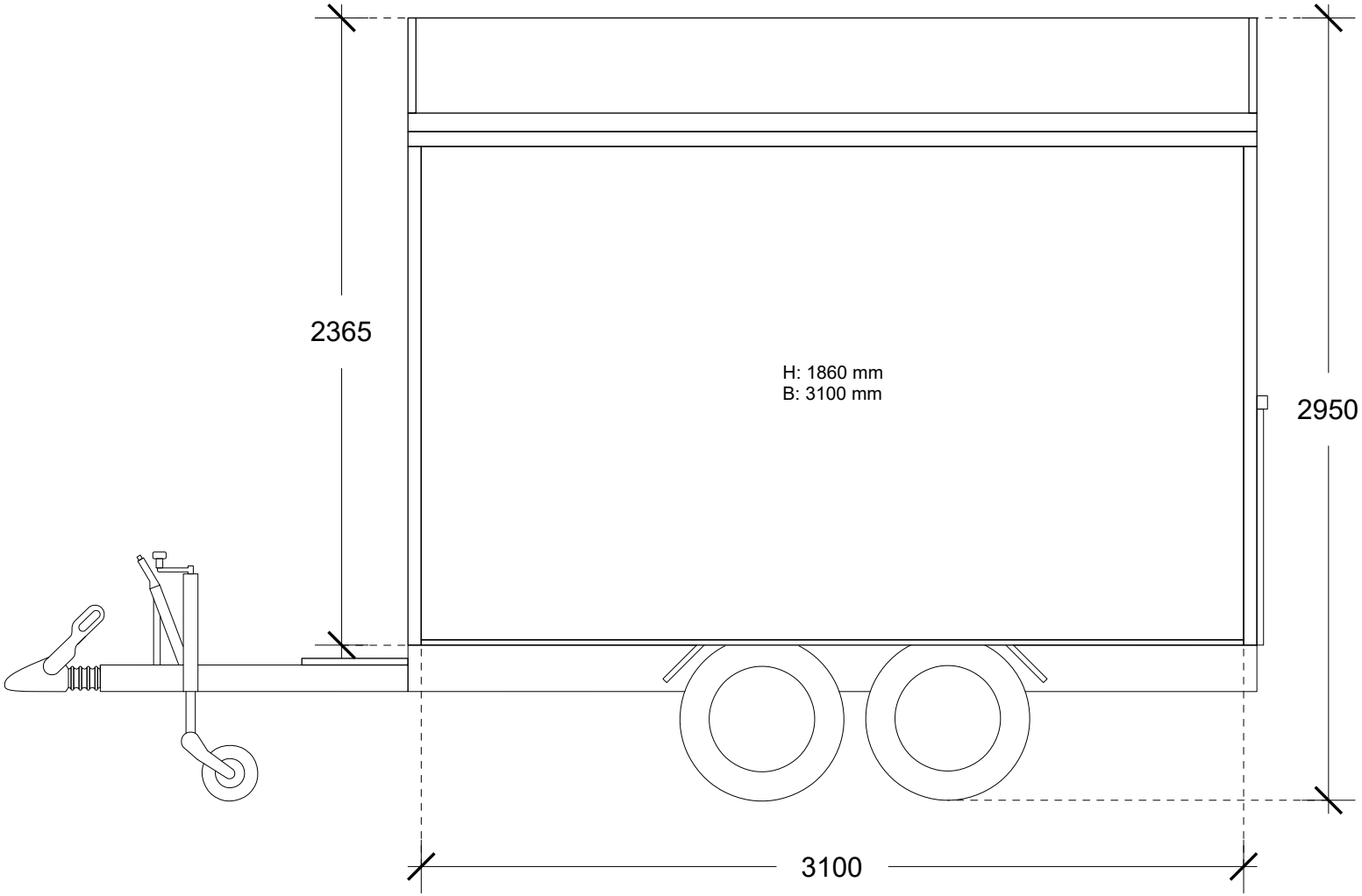

WWW.TINYOFFICE.DK

TINY OFFICE

TINY OFFICE TO GO

VENSTRE SIDE

SKALA 1:25